Invacare® Top End® Eliminator™ U Cage OSR Racing Wheelchair

Custom frames may have stylistic variations. Dimensional properties and tolerances committed to by Top End are defined in the Measurement Definitions Documents, which can be found on the resource center of www.topendwheelchair.com

Product Description:

Designed for speed, the Invacare® Top End® Eliminator™ OSR racing wheelchair offers exceptional stability and aerodynamics. The Eliminator™ OSR racing wheelchair features a relaxed head tube angle for great cornering and maximum traction. Combined with the stiff aerodynamic T-frame design, precision track compensator system, integral wrap around fenders, aluminum side panels and rubber coated pushrims plus a choice of three cage styles to maximize personal performance, it is easy to see why it the choice of champions around the world. The U cage is Recommended for more advanced athletes whom wish to kneel only. the U cage frame design does not allow for the sitting position. This cage does require good transfer skills.

About New Smart Forms:

Top End is excited to introduce a new way to order Top End products. Our new Smart Forms provide an easy and electronic way to fill out order forms, save copies, and submit them via e-mail. Please see below for the features and useful information. Please note that because of the many upgrades available on our Invacare® Top End® Eliminator™ OSR Wheelchair, the base price does not include wheels. The standard selections are set as the default for your convenience and the overall price will be adjusted accordingly. This will allow you to build your Invacare® Top End® Eliminator™ OSR Wheelchair exactly how you want it!

How to use:

- Use any Adobe Acrobat application to electronically fill out the order form
- Use the default selections to order a product with the most common configuration
- Use the **"Reset"** button located in the forms footer to reset selections to their defaults
- Use the **"Clear All" button** located in the forms footer to clear selections, including defaults. This feature allows for a blank order form to be printed and completed by hand
- Use the **"E-mail to Top End order box"** button located on the last page of the form to e-mail the completed form directly to the topendorders@invacare.com e-mail inbox
- Forms can be completed electronically, printed, and e-mailed or faxed to topendorders@invacare.com or 727-522-1007 if access to Acrobat Reader for Windows is unavailable

  (Acrobat Reader for Windows with java-script enabled is required to save and attach to e-mail)

Features:

- Tabulated options for an organized and standardized work-flow
- New more specific option codes which will appear on confirmations to improve customer / manufacturing communication
- Common special requests have been given option codes
- Built in exclusions to help eliminate errors
- Ability to save the form after it is filled out
- Ability to e-mail the form inside Acrobat Reader rather than saving a copy and attaching to an e-mail
- Ability to clear the entire form so it can be printed and completed by hand in the field when a computer is not available
- Ability to reset form to default selections

Invacare Corporation Top End Division
All rights reserved. Trademarks are identified by the symbols ™ and ®. All trademarks are owned by or licensed to Invacare Corporation unless otherwise noted. Specifications and prices are subject to change without notification.
©2015 Invacare Corporation

Order Form and Price List: All products must be ordered directly from TopEnd or through an Invacare provider. Our **provider locator** is available at www.topendwheelchair.com

Invacare® Top End® Eliminator™ U Cage OSR Racing Wheelchair

Custom frames may have stylistic variations. Dimensional properties and tolerances committed to by Top End are defined in the Measurement Definitions Documents, which can be found on the resource center of www.topendwheelchair.com

PROVIDER / CUSTOMER INFORMATION:			
Provider Information:	End User Information:		
Date:	Name:		Height:
IVC Acct #:	Ship to Address:		Weight (lbs.):
Contact:	Address Line 2:		Leg Length (in.):
Phone #:	City:		Hip Width (in.):
Fax/Email:	State:	Zip:	Phone #:
◯ Ship to Provider	◯ Ship to End User		Email:

ORDER REQUEST TYPE:			
◯ Quote	◯ Quote and CAD	◯ Order	PO #

BASE MODEL: *(see definitions)*		
◉ 10020	Eliminator OSR - U Cage Frame Note: Chair ordered without front wheel, rear wheels, front tire, rear tires, pushrims or axles starts at $3,435	$3,725

Assembly: *(see definitions)*		
◯ 10046	Unassembled	$0
◯ 10047	Assembled	$250
Shipping:		
Shipping Fee *(Continental US Only - See definitions)*		$150

FORK TYPE:		
◯ 65218	Aluminum Fork	$0
◯ 65219	Carbon Fiber Fork *Only available with Bottom Mount Track Control* *Not available with Custom Fork Color Options*	$300

FRAME OPTIONS: *(see definitions and diagram below)*		
SEAT TYPE:		
◯ 75013	Standard Seat Upholstery, Omit Solid Seat	$0
◯ 75010	Aluminum Solid Seat	$75
◯ 75092	Carbon Solid Seat	$250
CAMBER TUBES:		
◯ 75018	Standard Full Camber Tube	$0
◯ 75015	2" Cut - Out Camber Tube	$250
◯ 75016	3" Cut - Out Camber Tube	$250
◯ 75017	4" Cut - Out Camber Tube	$250

KNEE WIDTH: *(see definitions and diagram)*		
◯ 15315	7.0" Knee Width	$0
◯ 15316	7.5" Knee Width	$0
◯ 15317	8.0" Knee Width	$0
◯ 15318	8.5" Knee Width	$0
◯ 15319	9.0" Knee Width	$0
◯ 15320	9.5" Knee Width	$0
◯ 15321	10.0" Knee Width	$0
◯ 15322	10.5" Knee Width	$0
◯ 15323	11.0" Knee Width	$0
◯ 15388	Custom Knee Width *(See Specials Request Box)*	$45

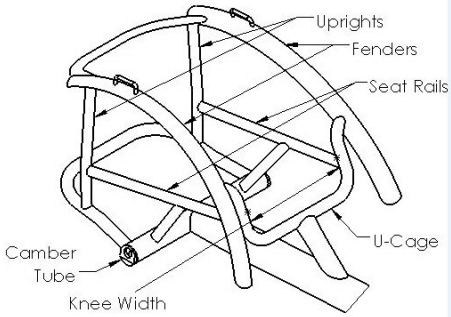

Invacare Corporation Top End Division
All rights reserved. Trademarks are identified by the symbols ™ and ®. All trademarks are owned by or licensed to Invacare Corporation unless otherwise noted. Specifications and prices are subject to change without notification.
©2015 Invacare Corporation

Invacare® Top End® Eliminator™ U Cage OSR Racing Wheelchair

Custom frames may have stylistic variations. Dimensional properties and tolerances committed to by Top End are defined in the Measurement Definitions Documents, which can be found on the resource center of www.topendwheelchair.com

FRAME WIDTH: *(see definitions and diagrams to the right)*		
UPPER FRAME WIDTH:		
☐ 15195	10.0" Upper Frame Width	$0
☐ 15196	10.5" Upper Frame Width	$0
☐ 15197	11.0" Upper Frame Width	$0
☐ 15198	11.5" Upper Frame Width	$0
☐ 15199	12.0" Upper Frame Width	$0
☐ 15200	12.5" Upper Frame Width	$0
☐ 15201	13.0" Upper Frame Width	$0
☐ 15202	13.5" Upper Frame Width	$0
☐ 15203	14.0" Upper Frame Width	$0
☐ 15204	14.5" Upper Frame Width	$0
☐ 15205	15.0" Upper Frame Width	$0
☐ 15206	15.5" Upper Frame Width	$0
☐ 15207	16.0" Upper Frame Width	$0
☐ 15208	16.5" Upper Frame Width	$0
☐ 15209	17.0" Upper Frame Width	$0
☐ 15377	Custom Upper Frame Width *(See Specials Request Box)*	$45
LOWER FRAME WIDTH:		
☐ 15217	11.0" Lower Frame Width	$0
☐ 15218	11.5" Lower Frame Width	$0
☐ 15219	12.0" Lower Frame Width	$0
☐ 15220	12.5" Lower Frame Width	$0
☐ 15221	13.0" Lower Frame Width	$0
☐ 15222	13.5" Lower Frame Width	$0
☐ 15223	14.0" Lower Frame Width	$0
☐ 15224	14.5" Lower Frame Width	$0
☐ 15225	15.0" Lower Frame Width	$0
☐ 15226	15.5" Lower Frame Width	$0
☐ 15227	16.0" Lower Frame Width	$0
☐ 15228	16.5" Lower Frame Width	$0
☐ 15229	17.0" Lower Frame Width	$0
☐ 15230	17.5" Lower Frame Width	$0
☐ 15231	18.0" Lower Frame Width	$0
☐ 15378	Custom Lower Frame Width *(See Specials Request Box)*	$45

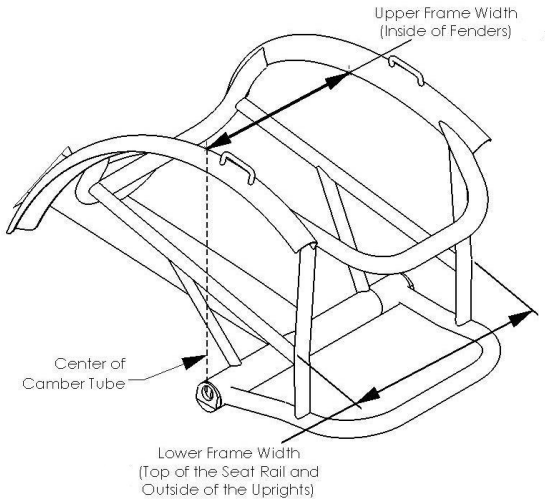

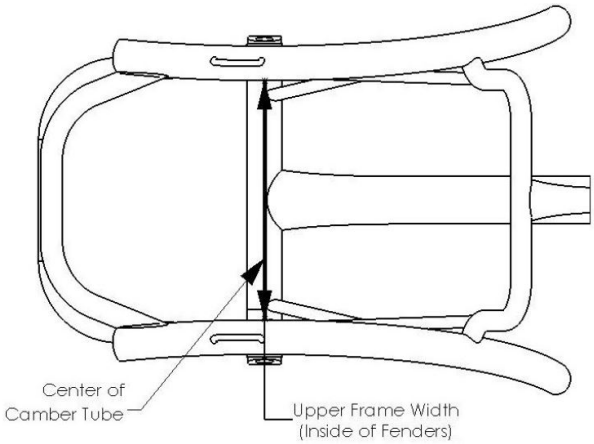

Invacare Corporation Top End Division
All rights reserved. Trademarks are identified by the symbols ™ and ®. All trademarks are owned by or licensed to Invacare Corporation unless otherwise noted. Specifications and prices are subject to change without notification.
©2015 Invacare Corporation

Order Form and Price List: All products must be ordered directly from TopEnd or through an Invacare provider. Our **provider locator** is available at www.topendwheelchair.com

Invacare® Top End® Eliminator™ U Cage OSR Racing Wheelchair

Custom frames may have stylistic variations. Dimensional properties and tolerances committed to by Top End are defined in the Measurement Definitions Documents, which can be found on the resource center of www.topendwheelchair.com

AXLE POSITION: *(see diagram below)*		
◯ 15236	5.0" Axle Position	$0
◯ 15237	5.5" Axle Position	$0
◯ 15238	6.0" Axle Position	$0
◯ 15239	6.5" Axle Position	$0
◯ 15240	7.0" Axle Position	$0
◯ 15241	7.5" Axle Position	$0
◯ 15242	8.0" Axle Position	$0
◯ 15381	Custom Axle Position *(See Specials Request Box)*	$45

KNEE DEPTH: *(see definitions and diagram below)*		
◯ 15373	16.0" Knee Depth	$0
◯ 15273	16.5" Knee Depth	$0
◯ 15374	17.0" Knee Depth	$0
◯ 15274	17.5" Knee Depth	$0
◯ 15275	18.0" Knee Depth	$0
◯ 15276	18.5" Knee Depth	$0
◯ 15375	19.0" Knee Depth	$0
◯ 15278	19.5" Knee Depth	$0
◯ 15376	20.0" Knee Depth	$0
◯ 15387	Custom Knee Depth *(See Specials Request Box)*	$45

SIZING: *(see definitions and diagram below)*		
REAR SEAT HEIGHT:		
◯ 15280	15.0" Rear Seat Height	$0
◯ 15281	15.5" Rear Seat Height	$0
◯ 15282	16.0" Rear Seat Height	$0
◯ 15283	16.5" Rear Seat Height	$0
◯ 15284	17.0" Rear Seat Height	$0
◯ 15285	17.5" Rear Seat Height	$0
◯ 15286	18.0" Rear Seat Height	$0
◯ 15287	18.5" Rear Seat Height	$0
◯ 15288	19.0" Rear Seat Height	$0
◯ 15289	19.5" Rear Seat Height	$0
◯ 15290	20.0" Rear Seat Height	$0
◯ 15379	Custom Rear Seat Height *(See Specials Request Box)*	$45
OVERALL LENGTH:		
◯ 15245	64" Overall Length	$0
◯ 15247	66" Overall Length	$0
◯ 15249	68" Overall Length	$0
◯ 15251	70" Overall Length	$0
◯ 15253	72" Overall Length	$0
◯ 15255	74" Overall Length	$0
◯ 15257	76" Overall Length	$0
◯ 15380	Custom Overall Length *(See Specials Request Box)*	$45

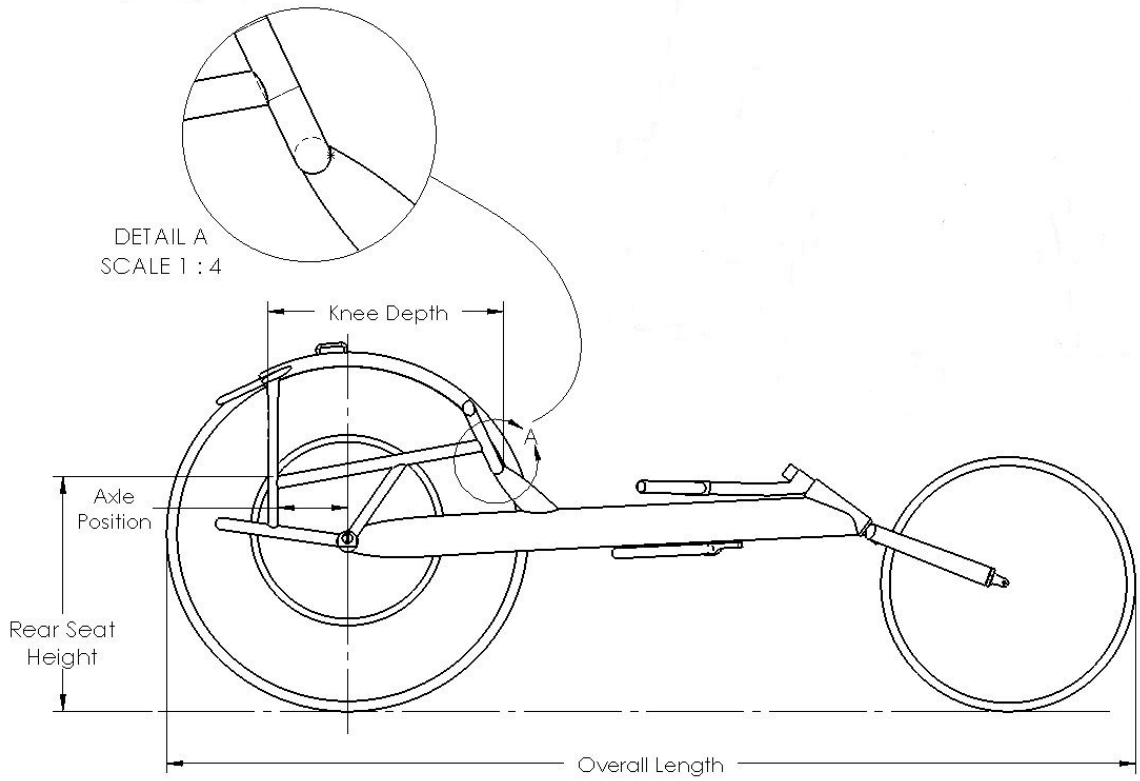

Invacare Corporation Top End Division
All rights reserved. Trademarks are identified by the symbols ™ and ®. All trademarks are owned by or licensed to Invacare Corporation unless otherwise noted.
Specifications and prices are subject to change without notification.
©2015 Invacare Corporation

Clear All Reset Form

Invacare® Top End® Eliminator™ U Cage OSR Racing Wheelchair

Custom frames may have stylistic variations. Dimensional properties and tolerances committed to by Top End are defined in the Measurement Definitions Documents, which can be found on the resource center of www.topendwheelchair.com

KNEE HEIGHT: *(see diagram below)*		
15305	16.0" Knee Height	$0
15310	16.5" Knee Height	$0
15306	17.0" Knee Height	$0
15311	17.5" Knee Height	$0
15307	18.0" Knee Height	$0
15312	18.5" Knee Height	$0
15308	19.0" Knee Height	$0
15313	19.5" Knee Height	$0
15309	20.0" Knee Height	$0
15386	Custom Knee Height *(See Specials Request Box)*	$45

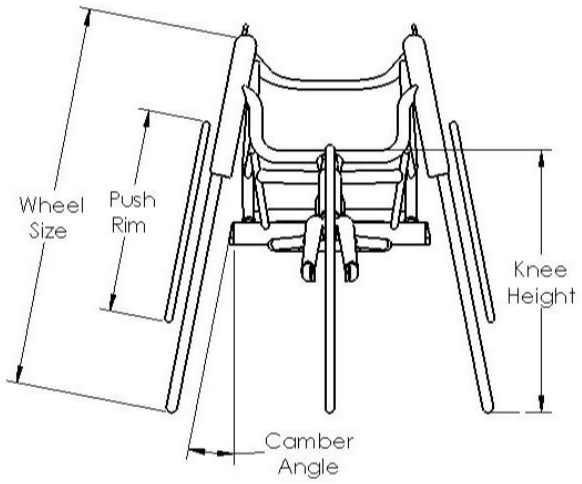

STEERING: *(see diagrams below)*		
STEERING HANDLE TYPE:		
65120	Horizontal Steering Handle	$0
65121	Vertical Steering Handle	$0
TRACK CONTROL:		
65115	Triangle Track Control	$0
65116	Oval Track Control	$0
TRACK CONTROL MOUNT:		
65110	Top Mount Track Control	$0
65111	Bottom Mount Track Control	$0

STEERING HANDLES:

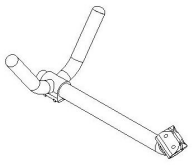

Vertical Steering

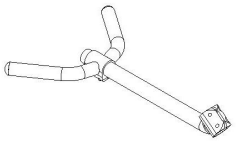

Horizontal Steering

TRACK CONTROL:

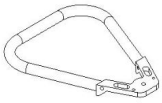

Triangle

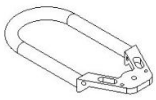

Oval

CAMBER ANGLE: *(see definitions and diagram to the left)*		
45005	11 Degree Camber	$0
45006	12 Degree Camber	$0
45007	13 Degree Camber	$0
45008	15 Degree Camber	$0

WHEEL SETS: *(see definitions and diagram to the left)*		
FRONT WHEEL TYPE:		
50150	Omit Front Wheel Build for 20"	-$30 *(credit)*
50145	20" Metal Spoked	$0
50146	20" Corima Carbon Fiber	$600
REAR WHEEL TYPE:		
50153	Omit Rear Wheels & Axles, Build for 700C	-$100 *(credit)*
50152	Omit Rear Wheels & Axles, Build for 26"	-$100 *(credit)*
50143	High Performance, 700C *(Clincher)*	$0
50139	High Performance, 26" *(Clincher)*	$100
50147	Corima Carbon Fiber Disc, 700C *(Tubular)*	$2,495
50148	Corima Carbon Fiber 4 Spoke, 700C *(Tubular)*	$2,495
FRONT TIRE TYPE:		
50157	Omit Front Tire	-$20 *(credit)*
50464	20" Vittoria	$0
50463	20" Panaracer	$50
REAR TIRE TYPE:		
50164	Omit Rear Tires	-$20 *(credit)*
50236	26" Panaracer *(Clincher - 23mm)*	$0
50460	700C, Black *(Clincher - 19mm)*	$0
50241	700C Continental Sprinter *(Tubular - 22mm)*	$70
50461	700C Panaracer Rapide *(Tubular - 20mm)*	$75
50462	700C Continental Podium *(Tubular - 22mm)*	$115

PUSHRIMS: *(Size Selection Required - see diagram)*		
RUBBER COATED PUSHRIM SIZE: (Diameter)		
50341	Omit Pushrims	-$120 *(credit)*
50330	12.0" Diameter Pushrims	$0
50331	12.5" Diameter Pushrims	$0
50332	13.0" Diameter Pushrims	$0
50333	13.5" Diameter Pushrims	$0
50334	14.0" Diameter Pushrims	$0
50335	14.5" Diameter Pushrims	$0
50336	15.0" Diameter Pushrims	$0
50337	15.5" Diameter Pushrims	$0
50338	16.0" Diameter Pushrims	$0
50339	16.5" Diameter Pushrims	$0
50340	Custom Pushrim Size *(See Specials Request Box)*	$45

Invacare Corporation Top End Division
All rights reserved. Trademarks are identified by the symbols ™ and ®. All trademarks are owned by or licensed to Invacare Corporation unless otherwise noted. Specifications and prices are subject to change without notification.
©2015 Invacare Corporation

Order Form and Price List: All products must be ordered directly from TopEnd or through an Invacare provider. Our **provider locator** is available at www.topendwheelchair.com

Invacare® Top End® Eliminator™ U Cage OSR Racing Wheelchair

Custom frames may have stylistic variations. Dimensional properties and tolerances committed to by Top End are defined in the Measurement Definitions Documents, which can be found on the resource center of www.topendwheelchair.com

UPHOLSTERY:		
MATERIAL & COLOR:		
◉ 30001	Nylon, Black Upholstery	$0
BACK UPHOLSTERY STYLE:		
◉ 30028	Adjustable Tension Back Upholstery	$0
SEAT UPHOLSTERY:		
◯ 30016	6" Seat Upholstery Length	$0
◯ 30017	9" Amputee Seat Upholstery Length	$0
SEAT CUSHIONS:		
◯ 30018	Soft Seat Cushion	$39

ACCESSORIES:		
SAFETY:		
◯ 25015	Safety Light, Front *(White)*	$15
◯ 25016	Safety Light, Rear *(Red)*	$15
◯ 25018	Helmet, Small/Medium	$30
◯ 25019	Helmet, Medium/Large	$30
◯ 25073	Safety Flag and Mount	$50
POSITIONING:		
◯ 25001	Click Strap, 8" Small	$75
◯ 25002	Click Strap, 10" Medium	$80
◯ 25003	Click Strap, 12" Large	$90
PERFORMANCE ENHANCEMENT:		
◯ 25024	Cordless Computer	$100
◯ 25022	Wheel Alignment Gauge	$215
TRAINING: *Indoor training roller available but sold and shipped separately.*		
◯ 25033	Heart Rate Monitor	$95
◯ 25076	Garmin Computer/Heart Rate Monitor	$500
BAGS:		
◯ 25031	Wheel Bag	$215
APPAREL:		
◯ 25084	Lemon Yellow Top End T-Shirt	$20
◯ 25085	Grey Top End T-Shirt	$20
◯ 25086	Grey Top End Racer Back Tank Top	$20
Please select a size for your shirt selection:		
◯ 25087	Extra Small	
◯ 25088	Small	
◯ 25089	Medium	
◯ 25090	Large	
◯ 25091	Extra Large	
◯ 25092	XX Large	
◯ 25093	XXX Large	

COLOR OPTIONS:			
FRAME COLOR:			
◯ 55018	Black	Wet Black	$0
◯ 55019	Black	Black Prism	$0
◯ 55017	Black	Stealth Black	$0
◯ 55010	Blue	Midnight Blue	$0
◯ 55011	Blue	Royal Blue	$0
◯ 55012	Blue	Electric Blueberry	$0
◯ 55023	Grey	Stealth Grey	$0
◯ 55053	Green	Agriculture Green	$0
◯ 55008	Green	Grasshopper Green	$0
◯ 55054	Green	Neon Green	$0
◯ 55006	Orange	Sunkissed Orange	$0
◯ 55005	Orange	Simple Orange	$0
◯ 55051	Orange	Neon Orange	$0
◯ 55015	Pink	Bubblegum Pink	$0
◯ 55057	Pink	Neon Pink	$0
◯ 55055	Purple	Lilac Purple	$0
◯ 55001	Red	Simple Red	$0
◯ 55002	Red	Tangerine Red	$0
◯ 55003	Red	Raspberry Red	$0
◯ 55050	Red	Neon Red	$0
◯ 55020	Silver	Silver Metallic	$0
◯ 55016	White	White Snow	$0
◯ 55007	Yellow	Safety Yellow	$0
◯ 55052	Yellow	Neon Yellow	$0
◯ 55066	Raw	Buffed Aluminum	$350
FORK COLOR:			
◯ 55068	Black	Flat Black	$0
◯ 55041	Black	Wet Black	$100
◯ 55042	Black	Black Prism	$100
◯ 55040	Black	Stealth Black	$100
◯ 55033	Blue	Midnight Blue	$100
◯ 55034	Blue	Royal Blue	$100
◯ 55035	Blue	Electric Blueberry	$100
◯ 55046	Grey	Stealth Grey	$100
◯ 55061	Green	Agriculture Green	$100
◯ 55031	Green	Grasshopper Green	$100
◯ 55062	Green	Neon Green	$100
◯ 55029	Orange	Sunkissed Orange	$100
◯ 55028	Orange	Simple Orange	$100
◯ 55059	Orange	Neon Orange	$100
◯ 55038	Pink	Bubblegum Pink	$100
◯ 55065	Pink	Neon Pink	$100
◯ 55063	Purple	Lilac Purple	$100
◯ 55024	Red	Simple Red	$100
◯ 55025	Red	Tangerine Red	$100
◯ 55026	Red	Raspberry Red	$100
◯ 55058	Red	Neon Red	$100
◯ 55043	Silver	Silver Metallic	$100
◯ 55039	White	White Snow	$100
◯ 55030	Yellow	Safety Yellow	$100
◯ 55060	Yellow	Neon Yellow	$100
◯ 55077	N/A	Carbon Fiber Fork Chosen	$0

Invacare Corporation Top End Division

All rights reserved. Trademarks are identified by the symbols ™ and ®. All trademarks are owned by or licensed to Invacare Corporation unless otherwise noted. Specifications and prices are subject to change without notification.
©2015 Invacare Corporation

Clear All Reset Form

Order Form and Price List: All products must be ordered directly from TopEnd or through an Invacare provider. Our **provider locator** is available at www.topendwheelchair.com

Invacare® Top End® Eliminator™ U Cage OSR Racing Wheelchair

Custom frames may have stylistic variations. Dimensional properties and tolerances committed to by Top End are defined in the Measurement Definitions Documents, which can be found on the resource center of www.topendwheelchair.com

DEFINITIONS:

Assembled vs Unassembled:	If TE10046 (Unassembled) is selected the chair will require about 60 minutes of assembly upon delivery (instructions provided). If TE10047 (Assembled) is selected the chair will be fully assembled upon delivery. Shipping rate is $150 for all shipments in the continental US. Freight quotes for shipments outside the continental US are available upon request.
Open V Cage:	Recommended for beginner level athletes with T-10 SCI and above as that level of injury requires more of a bucket type seat. Designed for people who prefer the seated position and/or may also want to kneel. This cage does require good transfer skills.
U Cage:	Recommended for experienced customers who exclusively use the kneeling position. Customers tend to have good balance and are T-10 injury level or below. U cage includes an aluminum knee plate for extra rigidity.
I Cage:	I Cage is the easiest transfer style to use but cannot be converted to a kneeling position. This style is typically used by higher level injury athletes who sit in the traditional feet forward position with an adjustable fixed style footrest.
Aluminum Solid Seat:	Provides a solid surface. Not recommended if customers intend to adjust the seat upholstery.
Carbon Fiber Solid Seat:	Provides a solid Carbon fiber surface. Not recommended if customers intend to adjust the seat upholstery.
Cut Out Camber Tube:	The distance from the front of the cut Camber Tube to the back of the support tube.Recommended when a customer who desires a kneeling position requires additional space for their lower legs. This additional space is accomplished by removing the center portion of the camber tube after welding. Creates more room for legs with low seat heights.
Camber Angle:	Angle of the wheels. Measured from vertical to the angle of the rear tire on one side.
Upper Frame Width:	Measured directly above the center of the Camber Tube, between the insides of the Fenders. Maximum width is 17".
Lower Frame Width:	Measured at the top of the Seat Rail and from the outside of the Uprights. Maximum width is 18".
Rear Seat Height:	Measured from the top of the Seat Rail to the ground.
Overall Length:	Measured from the further most outsides of the front & rear tires.
Axle Position:	Measured from the center of the Camber Tube to the front of the rear Upright. **(This needs to be parallel to the ground.)**
Knee Height:	Measured from the top of the U-Cage Horizontal Cross Member to the ground.
Knee Depth:	Measured from the back of the Rear Upright to the front of the U-Cage Cross member. **(This needs to be parallel to the ground.)**
Knee Width:	Measured between the inside of the U-Cage vertical tubing.
Wheel Size:	Eliminator OSR Racing wheelchairs use 700c and 26" size wheels with threaded axles. A standard threaded axle 700c metal spoke wheel with inflated black primo tire measures 26-1/2" +/- 1/8" from outside to outside of the tire. A standard threaded axle 26" metal spoke wheel with inflated Panaracer tire measures 24-1/2" +/- 1/8" from outside to outside of the tire.
Pushrim Size:	Measurement from outside to outside of the metal tubing of the pushrim.

PRODUCT SPECIFICATIONS:

Weight Capacity:	250 pounds, 113 Kilograms
Approximate Chair Weight:	21 pounds, 9.5 Kilograms
Approximate Box Weight:	37 pounds, 17 Kilograms
Box Dimensions:	77" X 27" X 23"

NOTES:

Tubular Tires:	A tubular tire (or sew-up) is a bicycle tire that is stitched closed around the inner tube to form a torus. The combination is then glued onto the wheel.
Clincher Tires:	A clincher tire uses a separate airtight inner tube enclosed by the rim which supports the tire carcass and maintains the bead lock. An advantage of this system is that the inner tube can be easily accessed in the case of a leak to be patched or replaced.
Front Tire:	Vittoria tire has a thicker tread pattern and is great for training and racing.
Rear Tire Options:	- 700c Continental Sprinter tires are great for racing and training - 700c Continental Podium are thinner lighter, better for racing
Fenders:	Fenders are made to accommodate a tire that is up to 25mm.
Omit Wheels:	When omit wheels is selected, product will not come with wheels, tires, tubes, pushrims or axles.

Warranty Info:

Invacare warrants the frames and fork when purchased new and unused to be free from defects in materials and workmanship for a period of two (2) years from the date of purchase from Invacare or a dealer, with a copy of the seller's invoice required for coverage under this warranty. Invacare warrants the upholstered materials (seat and back) and remaining components of this product when purchased new and unused to be free from defects in materials and workmanship for a period of thirteen (13) months from date of purchase from Invacare or a dealer, with a copy of the seller's invoice required for coverage under this warranty

Note: All special requests are subject to approval, additional charges, and additional lead time.

Special Request 1)	
Special Request 2)	
Special Request 3)	
Special Request 4)	
Special Request 5)	

E-mail to Top End Order Box

Invacare Corporation Top End Division
All rights reserved. Trademarks are identified by the symbols ™ and ®. All trademarks are owned by or licensed to Invacare Corporation unless otherwise noted. Specifications and prices are subject to change without notification.
©2015 Invacare Corporation

Clear All Reset Form